CHC1483
ASSEMBLY & INSTALLATION GUIDE

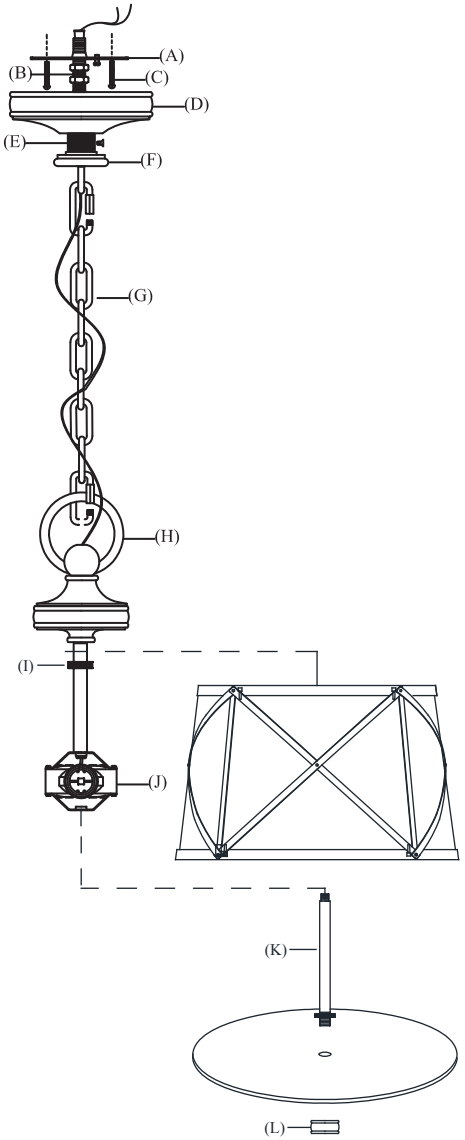

WE RECOMMEND INSTALLATION OF THIS LIGHTING FIXTURE BE DONE BY A LICENSED ELECTRICIAN.

WARNING * SWITCH OFF THE MAIN ELECTRICAL SUPPLY FROM THE MAIN FUSE BOX/CIRCUIT BREAKER BEFORE INSTALLATION.**

INSPECT ITEM CAREFULLY BEFORE ATTEMPTING TO INSTALL. IF THERE IS ANY DAMAGE OR OBVIOUS DEFECT, DO NOT INSTALL.

ITEM MAY NOT BE RETURNED ONCE IT HAS BEEN INSTALLED.

---

1. Remove all parts carefully from box.
2. Screw the lamp pole (K.) onto the assembly part (J), and hand tighten until sung.
3. Hook top loop (H) to the end link of the chain (G).
4. Attach mounting strap (A) to ceiling outlet box using mounting screws (C) provided.
5. Insert threaded nipple (B) in mounting strap (A). Using pliers, thread one of hex nut to nipple (B) to secure.
6. Feed wire through chain (G) mounting loop (E) and nipple (B).
7. Unscrewing the canopy ring (F) from chain mounting loop (E) and slide canopy (D) and canopy ring (F) on chain.
8. Attach chain mounting loop (E) to thread nipple using the ceiling loop screw. I0. Attach chain (G) with fixture to chain mounting loop (E) at desired height.
9. Attach the ground wire (silver or brass in color) from the fixture to the ground junction box wire (usually green or copper wire). Fasten together with a plastic wire connector and wrap the connection with electrical tape. Be sure no wire strands are exposed. It is imperative that the outlet box in your home be properly grounded. Be sure no wire strands are exposed.
10. Connect the neutral wire from the fixture (ridges molded wire) to the neutral wire from the junction box (usually white). Fasten together with a plastic wire connector and wrap the connection with electrical tape. Be sure no wire strands are exposed.
11. Connect the hot wire from the fixture (smooth wire) to the hot wire (usually black) from the junction box. Fasten each together with a plastic wire connector and wrap the connection with electrical tape. Be sure that no wire strands are exposed. DO NOT REVERSE THE HOT AND NEUTRAL CONNECTIONS OR SAFETY WILL BE COMPROMISED.
12. Tuck wire connection neatly into ceiling outlet box.
13. Slip canopy (D) to ceiling and secure with threaded canopy ring (F).
14. Attach shade (not included) to threaded section and secure with ring (I).
15. Insert light bulbs into the sockets.
16. Attach diffuser (not included) to rod (K), letting threaded nipple of rod (K) pass through the center hole of diffuser and secure with finial (L).

Intertek DRY

VISUAL COMFORT & CO. Est. 1987