**TEAR SHEET**

**Teline 54" Oval Linear**

Item # KW 5107WHT

Designer: Kelly Wearstler

O/A Height: 58"
Fixture Height: 14.75"
Min. Custom Height: 20.75"
Width: 54"
Canopy: 5" x 27.75" Oval
Finishes: AB/WHT, BLK, WHT
Lightsource: Dedicated LED
Wattage: 30w (3600lm)
Weight: 31 Pounds
Note: UL Only | Slope Ceiling Compatible Only when Mounted Perpendicular to Slope | Custom Height Availab

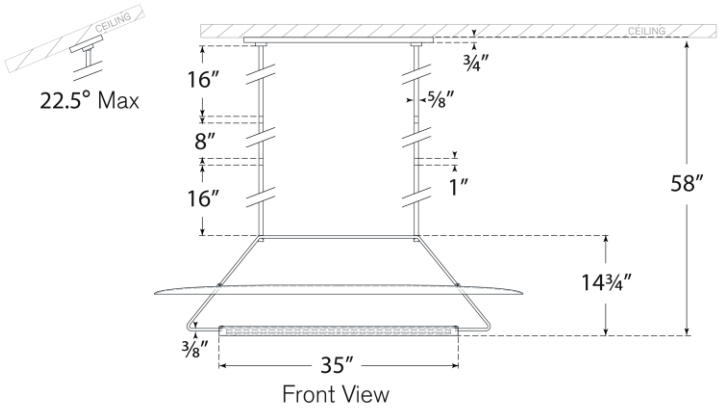


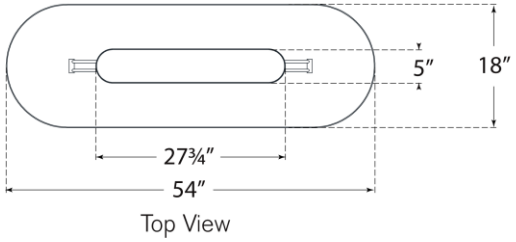


VISUAL COMFORT & CO.

DAMP LED 4