TEAR SHEET

Callaway Large Hanging Shade
Item # S 5687HAB-L/FA

Designer: Carrier and Company

Height: 19.25"
Width: 24.5"
Canopy: 5" Round
Finishes: BZ, HAB, PN
Shade Treatments: L
Shade Details: 20.5" x 22" x 15.5"
Socket: 3 - E26 Keyless
Wattage: 3 - 15 LED A19
Weight: 15 Pounds

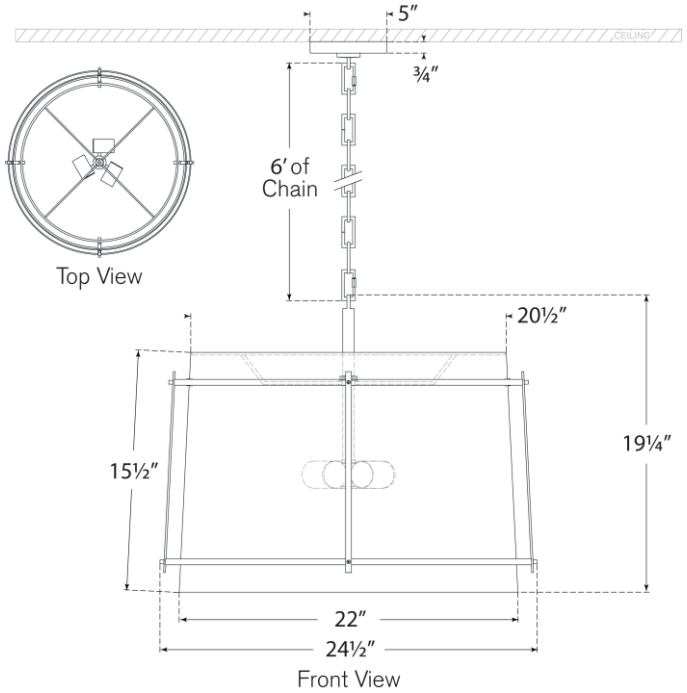

VISUAL COMFORT