TEAR SHEET

Goodman Medium Hanging Light

Item # TOB 5091BZ-L

Designer: Thomas O'Brien

O/A Height: 41.5"
Fixture Height: 15.5"
Min. Custom Height: 22.75"
Width: 18"
Canopy: 5" Round
Finishes: AN, BZ, BZ/HAB, HAB
Shade Treatments: AN, ASH, AW, BZ, HAB, L, NAB, TS
Shade Details: 6.5" x 18" x 15.5"
Socket: E26 Keyless
Wattage: 100 A19
Weight: 8 Pounds

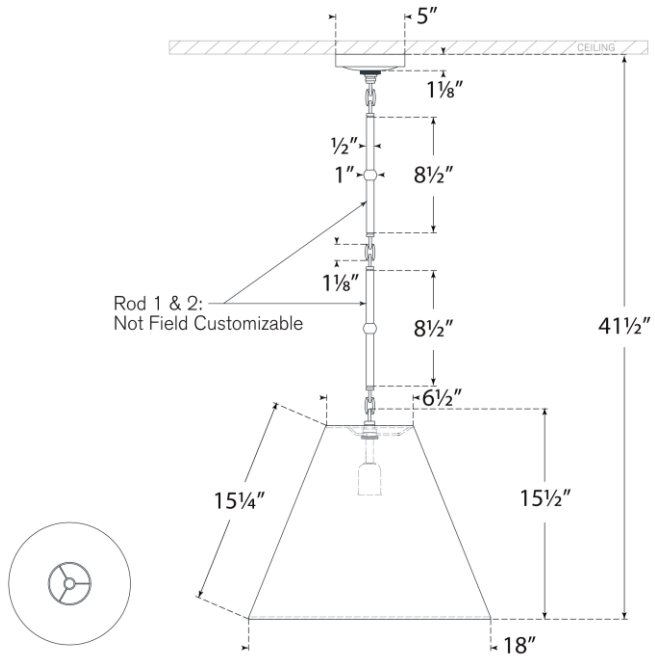

VISUAL COMFORT & CO.